AUSTRALIAN TAS CATALOGUE

WALTERSCHEID

TRACTOR ATTACHMENT SYSTEM

Agricultural 3 Point Coupler Systems & Components

TAS 2013

This catalogue is the copyright of Walterscheid Australia.

Tractor Attachment System

CONTENTS

Lower Link Hook Sets	2
Lower Link Hook Spare Parts	2
Lower Link Hook Accessories	3
Weld On Ball Ends	4
Hydraulic Lift Link	5
Hydraulic Side Shift	5
Lower Link Stabilisers	6 - 7
Hydraulic Top Link - Integral Eyeball + Hook	8
Hydraulic Top Link - Fork End + Hook	9
Hydraulic Top Link - Fork End + Eyeball	9
Hydraulic Top Link - Components	10 - 13
Manual Top Link - Complete	15
Manual Top Link - Components	16 - 17
Manual Top Link - Threaded Hooks	18 - 19
Fork Ends - Hydraulic & Manual	19
Top Link Accessories	20
Implement Measurements for 3 Point Attachment	21

WALTERSCHEID

HOOK SET & COMPONENTS

			Cat 1 (55HP)	Cat 2 (100HP)	Cat 3L (125HP)	Cat 3 (225HP)	Cat 4 (400HP)
Complete Hook Set	Set includes:		**200325**	**200050**	**200051**	**200052**	**200053**
Hook for Lower Link		2	**200182**	**200016**	**200018**	**200020**	**309746**
Spacer		1	**084734**	**084734**	**084734**	**090243**	**-**
Ball guide Cone		2	**305209** (Cat 1)	**099032** (Cat 2)	**099035** (Cat 3/2)	**099035** (Cat 3/2)	-
Adaptor Bush		2	-	**082651** (Cat 1/2)	-	-	-
Lower Ball Bush		2	**305051** (Cat 1)	**308800** (Cat 2)	**309246** (Cat 3/2)	**309246** (Cat 3/2)	**306330** (Cat 4) **200049** (Cat4/3)
Release Cable		1	**305393** (L = 3.5m)	**305393** (L =3.5m)	**305393** (L =3.5m)	**305451** (L = 4.0m)	-
Double Clamp		1	**305432**	**305432**	**305432**	**305432**	-
Double Eye		2	**098647**	**098647**	**098647**	**098647**	-
Electrodes		1	**094008**	**094008**	**094008**	**094008**	**3 x 094008**

HOOK SPARE PARTS

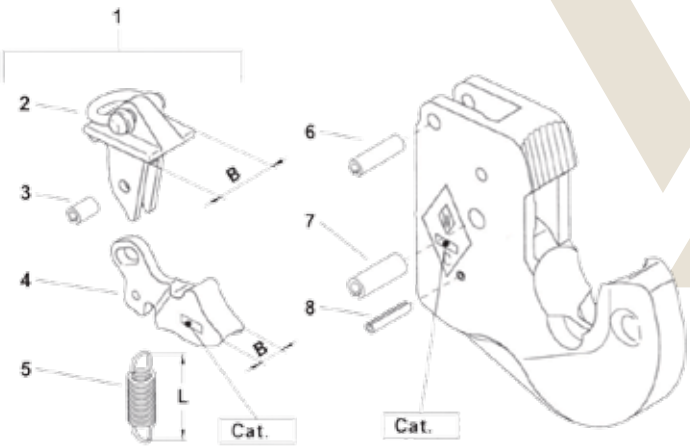

Ref	Description	Cat	Dimension	Part Number
1	Latch Kit	1,2	-	**200001**
		3L, 3	-	**200002**
		4	-	**309751**
2	Actuation cover	1,2	B = 34	**200029**
		3L, 3	B = 38	**200030**
		4	B = 50	**200031**
3	Spring type - straight pin	1,2	8x16	**308511**
		3L, 3	8x18	**309988**
		4	10x24	**020608**
4	Latch	1,2	B = 16	**308515**
		3L, 3	B = 18	**309758**
		4	B = 24	**309352**
5	Tension Spring	1,2	L = 46.8	**308524**
		3L, 3	L = 46.8	**308524**
		4	L = 65	**309755**
6	Spring type - straight pin	1	10x28	**200274**
		2	10x32	**099432**
		3L, 3	10x36	**308520**
		4	13x50	**304299**
7	Spring type - straight pin	1	10x28	**200274**
		2	10x32	**099432**
		3L, 3	13x36	**099599**
		4	18x50	**306342**
8	Spring type - straight pin	1	6x22	**305049**
		2	6x28	**010486**
		3L, 3	6x32	**099435**
		4	8x45	**306345**

Recommended Note:
i. The latch kit should always be relaced as a complete unit.
ii. Ref 3 install as shown (slot downwards).

HOOK ACCESSORIES

Description	CAT Hook	CAT Implement Side	Dimension			Part Number	
Ball guide cone (inc pin)			D	d	d1		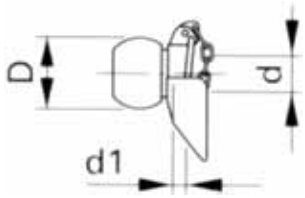
	1	1	44	22.4	12	305209	
	2	2	56	28.7	12	099032	
	3	2	64	28.7	12	099035	
	3	3	64	37.3	12	099034	
	3	3	64	37.3	17	099033	
Linch pin				L	d1		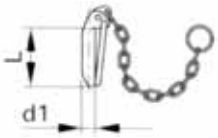
		1		45	12	200322	
		2		52	12	305855	
		3		61	17	305854	
Adaptor bush for ball guide cone			D	d	a		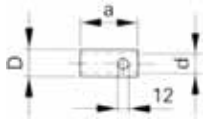
	2	1 / 2	28	22.4	63	082651	
	3	2 / 3	37	28.7	62	305281	
Lower ball bush for implement pins with all-side bearings			D	d	a		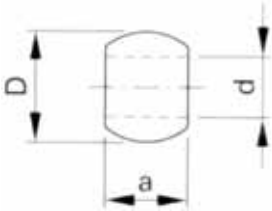
	1	1	44	22.4	35	305051	
	2	2	56	28.7	45	308800	
	3	2	64	28.7	45	309246	
	3	3	64	37.3	45	308801	
	3	3	64	37.3	45	202332*	
	4	3	85	37.3	57	200049	
	4	4	85	51.0	57	306330	
Adaptor bush for lower ball bush			D	d	a		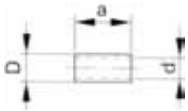
	2	1 / 2	28	22.4	45	305279	
	3	2 / 3	37	28.7	45	305280	
Spacer washer for lower implement pins with all-side bearings			D	d	a		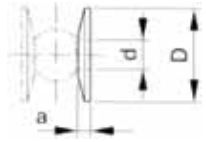
		2	90	28.7	13.5	305753	
		3	100	37.3	13.5	305754	
		4	125	51.0	18.5	306422	
Spacer	1, 2, 3L		L = 555 - 735			084734	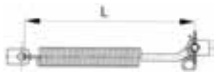
	3		L = 555 - 860			090243	
Guide Rod	1, 2, 3L		L = 292			088202	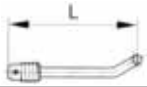
	3		L = 417			099416	
Tension Spring			L = 500			088099	
Spring pin				dia 4		088205	
Guide Cone (inc pin)				d	d1		
		2		28.7	12	082646	
Clamp-type guide cone				d	d1		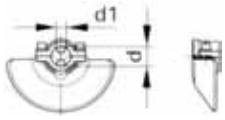
		2		28.0	12	089714	
		3		36.6	17	089716	
		4		50.8	17	204371	
Welding fixture	1, 2, 3L, 3	1, 2, 3L, 3				090940	
Lower release cable Double clamp Double eye Set of special electrodes	refer to Hook Set Components section						* Hardened and Tempered

WELD ON BALL ENDS

CAT	Dimension							Part Number	Installing Walterscheid Ball End Stick Weld (using Walterscheid Electrodes Part. 094008) or gas shielded arc welding only. An anhydrogenous high-strength, deep penetration weld is required.
	Ø D	A	L	H	R	B	C		
1	22.1	35	60	70	35	18	-	307547	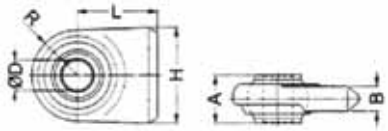
2H	28.4	45	75	90	42.5	22	-	306832	
3/2	28.1	45	80	100	50	25	-	307342	
3/2H	28.4	45	80	100	50	25	-	306382	
3H	37	45	80	100	50	25	-	306332	
3	32	51	80	100	50	25	-	308187	
2	26.2	35	70	70	42.5	22	-	307196	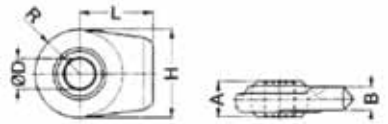
2H	28.4	35	70	70	42.5	22	-	306383	
3	37	47.5	80	100	50	25	32	308762	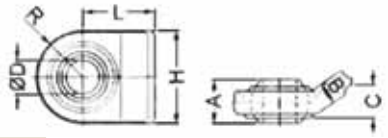
3	37	45	80	90	50	25	20	200438	
1/2	28.7	30.73	100.3	70	38	17.6	-	200911	
3	37	45	80	100	50	25	37	201505	
3	29	45	80	100	50	25	37	201506	
3/2	28	45	80	90	50	25	20	202296	
3H	37	45	80	90	50	25	20	202372	
2	28.4	45	80	90	45	25	17	307339	
4	45	57	100	no	63.5	32	28	309303	
4H	51	45	80	113.5	39	33	28	204335	
3	30	45	80	90	50	30	16	308756	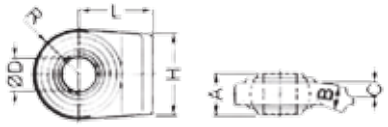
3	37	47.5	80	90	50	30	16	308806	
3H	37	45	80	90	50	30	16	307427	
3H	37	45	80	75	50	30	16	306665	
2H	28.4	45	100	80	42.5	22	16	309559	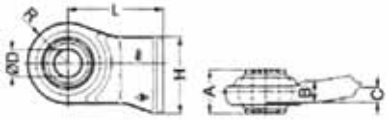
2H	28.4	45	100	80	42.5	22	16	309560	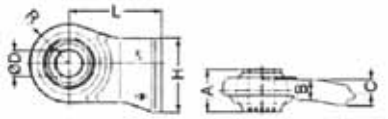
2	28	45	120	90	42.5	22	-	200750	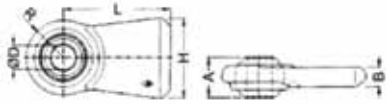
3	37	51	120	90	50	22	-	200752	

HYDRAULIC LIFT LINK

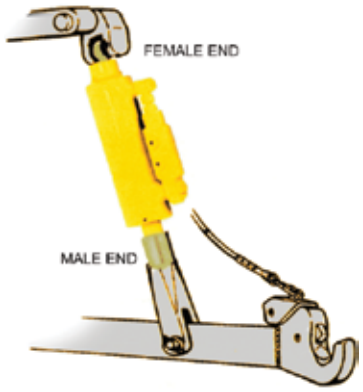

Cat	Length	Part Number
Cat 3	430 - 585	**306222**
(Supplied with screw on Weldable Ends & Loctite)		
Male end	-	306215
Female end	-	306216

HYDRAULIC SIDE SHIFT

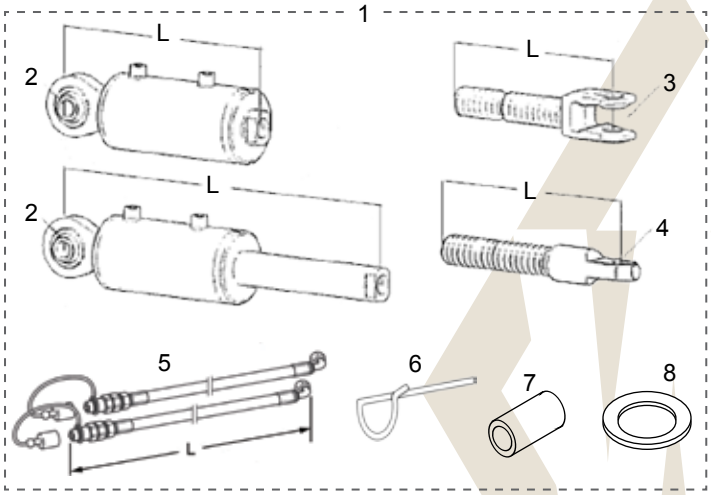

Ref	Description	L / size (mm)	Part Number
1	Hyd. Side Shift Complete Kit (Max Working Length 420 - 650)	310	**203508**
	Hyd. Side Shift Complete Kit (Max Working Length 650 - 900)	340	**203509**
2	Hyd Cylinder	310	**203060**
	Hyd Cylinder	340	**203485**
3	Fork Rod	370	**203495**
4	Rod Head	370	**203497**
5	Hyd Hose Kit	1500	**203498**
6	Lock Spring	-	**203496**
7	Adapter bush Cat 2-1	-	**082649**
8	Spacer Washer	26x44x4	**200647**
		21x37x2	**309253**

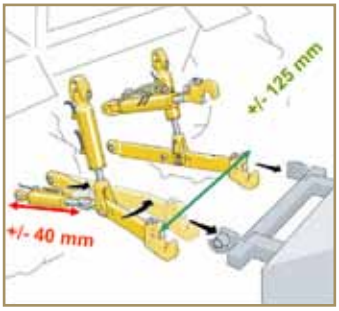

Hydraulically Adjustable Stabilizer HVST

The Hydraulically adjustable stabilizer gives the opportunity to side shift the complete 3 point linkage including any implement laterally up to +/- 250mm.

Therefore as an example for front and rear mower combination results in:

- Much better overlapping during curved driving
- Much better overlapping at slope mowing (anti-shift)
- Much better adjusting of implements along obstacles.

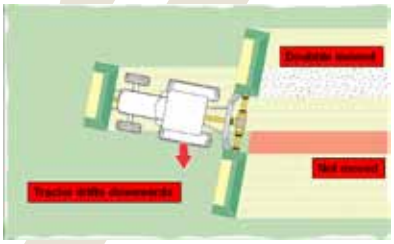

Example:
Slope moving without any anti-drift system.

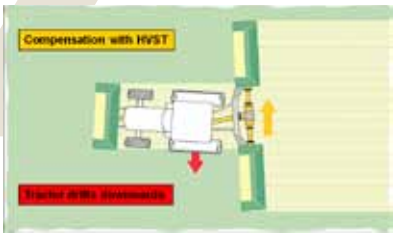

Example:
Slope moving with the hydraulically adjustable stabilizer HVST

Function:
The hydraulically adjustable stabilizer allows the following lateral movement (side-shift):
Stabilizer: +/- 40mm*
Lower Link: +/- 125mm*
Implement: +/- 250mm*

The HVST is installed into the same area as our market leading automatic stabilizer the ASST-B. The hydraulics are connected to and operated by a double acting SCV.

** This may vary according to geometry of 3-point system of the individual tractor.*

LOWER LINK STABILISER & COMPONENTS

	TRACTOR MAKE / MODEL	COMPLETE KIT	Body	KIT COMPONENTS: Fork Rod / Rod Head / Eye Bolt	F / R / E	Link Kit / Fork Rod Kit	LK / FK	Chain Kit	Optional Mounting Bracket
CASE	633,644,745,946,1055,1056,	**309021/99**	309021	308959	R	-		309099	-
CASE	844	**309021/49**	309021	309014	R	-		309099	-
CASE	12,551,455	**309021/09**	309021	308960	R	-		309099	-
CASE	CS110,120,130,150 Steyr 9105,9115,9125,9145	**309381/859**	309381	309008	F	201025	LK	309099	-
CASE	MX80,90,100,110,120,135	**309200/569**	309200	309445	R	201026	FK	201029	-
CASE	MX150,170	**309021/979**	309021	308739	R	201027	FK	201029	-
CASE	Maxxum 5120,5130,5140,5150	**309200/562**	309200	309445	R	201026	FK	309392	-
CLAAS	Xerion 2500,3000	**309381/79**	309381	308817	F	-		309099	-
DEUTZ-FAHR	Agroplus 75,85,95,100	**309021/259**	309021	200292	F	201025	LK	201029	-
DEUTZ-FAHR	Agrostar 6.05,6.11,6.31,6.38,6.61, Agratron 6.06 Agroextra 6.07 6.17	**309100/05**	309100	308350	R	-		309115	-
DEUTZ-FAHR	Agrotron 80,85,90,95,100,105,4.7,4.85, 4.90,4.95,6.01 DX6.10,6.30,6.50	**309100/89**	309100	308968	F	-		201029	-
DEUTZ-FAHR	Agrotron 106,110,120,135,150,160,180, 6.0,6.05,6.15,6.16,6.20,6.30,6.45	**309381/99**	309381	308769	F	-		201029	-
DEUTZ-FAHR	Agrotron 200,230,260	**201967/359**	201967	309963	F	201035	LK	201029	-
DEUTZ-FAHR	DX3.05,3.60,3.65,4.07,6.71,6.81	**309381/159**	309381	308481	F	201025	LK	201029	-
DEUTZ-FAHR	DX MHR&EHR 4.31,4.47,4.51,4.56,4.57	**309100/379**	309100	309113	F	201037	LK	201029	309073 (left) 309072 (right)
DEUTZ-FAHR	DX MHR&EHR 4.61,4.68,4.71,4.78,6.06,6.07	**309100/669**	309100	309116	F	201036	LK	201029	309069 (left) 309068 (right)
DEUTZ-FAHR	DX MHR 4.70,6.05	**309100/769**	309100	309117	F	201036	LK	201029	309069 (left) 309068 (right)
DEUTZ-FAHR	DX MHR 6.50,6.60	**309100/05**	309100	308350	R	-		309115	-
FENDT	Favorit 816,818,822,824	**309381/42**	309381	309384	R	-		309392	309119 (left) 309118 (right)
JCB	JCB 2115,2125,3135,3155,3185	**201967/639**	201967	308546	F	201033	LK	201029	-

LOWER LINK STABILISER & COMPONENTS

TRACTOR MAKE / MODEL		COMPLETE KIT	Body	Fork Rod / Rod Head / Eye Bolt	F / R / E	Link Kit / Fork Rod Kit	LK / FK	Chain Kit	Optional Mounting Bracket
JOHN DEERE	2850	**309021/63**	309021	309116	F	-		309213	-
	3040, 3140, 3640, 3650	**309021/89**	309021	200788	R	-		201029	-
	3100,3110R,3200,3210R,3300,3310R,3400,3410R	**309307/88**	309307	309308	R	-		309358	-
	5000 series	**309307/48**	309307	309394	R	-		309358	-
	6000 series	**309200/643**	309200	308596	F	201024	LK	309213	309189 (left&right)
	7000 series	**309201/653**	309201	308596	F	201035	LK	309213	309186 (left&right)
	8000 series	**308943/9**	308943	*		-		309099	-
LAMBORGHINI	Champion 120,135,150 Racing 150,165,190, Hi Per	**309381/859**	309381	308138	F	201025	LK	201029	-
	Premium 1050,1060,850,950	**309021/259**	309021	200292	F	201015	LK	201029	-
	Victory 230,260	**201967/359**	301967	309963	F	201035	LK	201029	-
MC CORMACK	CX90,100	**309200/569**	309200	309445	R	201026	LK	201029	-
	CX155 MTX200	**309021/99**	309021	308739	R	-		201029	-
MASSEY FERGUSON	3065, 3070, 3075, 3085	**309100/639**	309100	308596	F	201033	LK	201029	-
	3120	**309381/659**	309381	309116	F	201025	LK	201029	-
	4270	**309200/369**	309200	309963	F	201036	LK	201029	-
	6180, 6245, 6255, 6270, 6290	**309100/659**	309100	308596	F	201025	LK	201029	-
	81,708,180	**201967/439**	201967	308934	F	201033	LK	201029	-
	8250, 8260, 8270, 8280	**309381/459**	309381	308934	F	201035	LK	201029	-
	8460	**309100/679**	309100	308596	F	201037	LK	201029	-
NEW HOLLAND	G170,G210,8650,8970	**309381/419**	309381	308434	F	201031	LK	201029	-
	L60,65,75,85,95,4635,4835,5635,6635,7635	**309021/408**	309021	309394	R	201030	FK	309398	-
	M MHR 100,115,135,160,165 MHR 8160,8260, 8360,8560 TM 115,125,135,150,165	**309100/409**	309100	200284	R	201030	FK	201029	-
	TL100	**309021/669**	309021	309116	F	201036	LK	201029	-
	TS90,100,110,115	**309021/369**	309201	309113	F	201036	LK	201029	-
	Winner EHR F100,110,115,120,130,140	**309021/309**	309021	309393	R	201030	FK	201029	-
RENAULT	Ares 500,600,700	**201967/439**	201967	308934	F	201033	LK	201029	-
	Ceres 65,75,75X,85,85X,95,95X	**309307/88**	309307	309308	R	-		309358	-
SAME	Diamont 230,260	**201967/359**	201967	309963	F	201035	LK	201029	-
	Rubin 120,135,150 SuperTitan,Titan // 150,165,190, Titan 145,160,190	**309381/859**	309381	308138	F	201025	LK	201029	-
	Silver 80,90,100.4,100.6	**309021/259**	309021	200292	F	201025	LK	201029	-
VALTRA		**201960**	All included in Complete Kit						-

HYDRAULIC TOP LINK: INTEGRAL EYEBALL + HOOK (Implement Side)

Equipped with the original Walterscheid hook
Convenient operation by cable
Wide range of accessories
Seal and valve block can be replaced seperately.

Important Note: some tractor types do not have enough space for the top links with eyebolt on the tractor side. Top links with fork ends should be used in these cases.

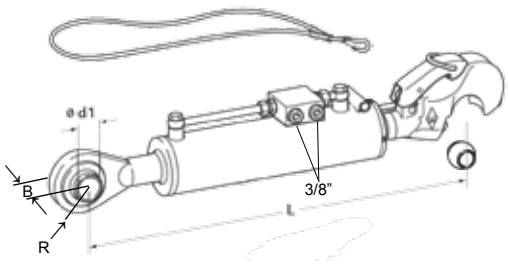

Option 1

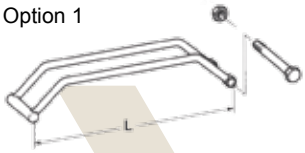

Option 2

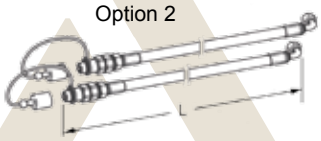

TopLink Includes		
Cat	Description	Part Number
All	Release Cable	**305453**
2	Ball Bush	**099042**
3 / 70	Ball Bush	**099044**

Tractor Power	Cat / Type	Length	Stroke	d1	B	R	Part Number
90 Hp	**2 / 63**	567 - 747	180	25.4	51	40	**203550**
		617 - 847	230	25.4	51	40	**203551**
140 Hp	**3 / 70**	626 - 836	210	25.4	51	48	**203552**
				32.2	51	48	**203553**
		666 - 916	250	25.4	51	48	**203554**
				32.2	51	48	**203555**
OPTIONAL ACCESSORIES							
Option 1	Retainer for Top Link with stroke 180 / 210				L = 275		**202526**
Option 1	Retainer for Top Link with stroke 230 / 250				L = 325		**202525**
Option 2	Hydraulic Hose Kit with Quick-Fitting couplings				L = 950		**202527**

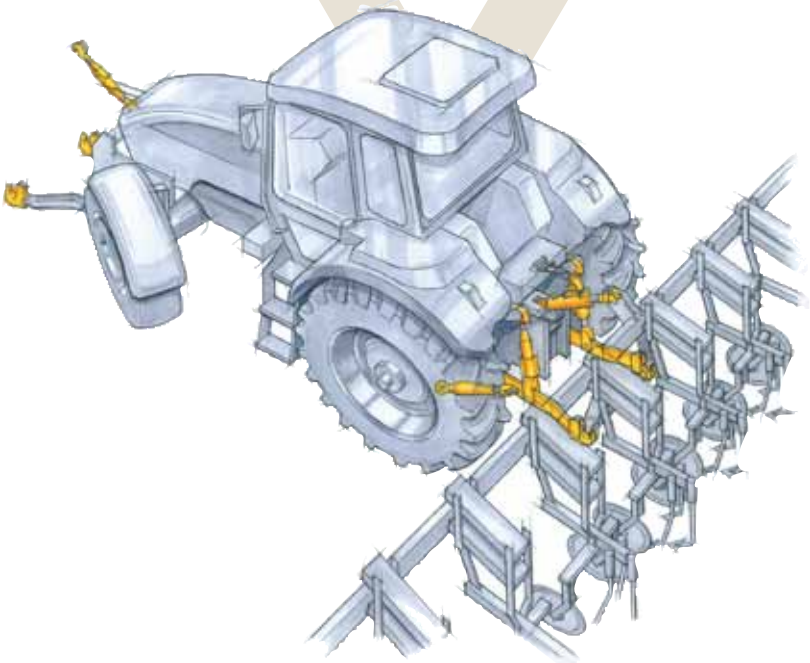

HYDRAULIC TOP LINK: FORK END + HOOK (Implement Side)

Equipped with the original Walterscheid hook
Versatile due to interchangeable fork ends
long service life valve block protected by special reinforced clip complete with marking bar and label, ball, cable, clip and tractor side retainer.
All components can be replaced separately.

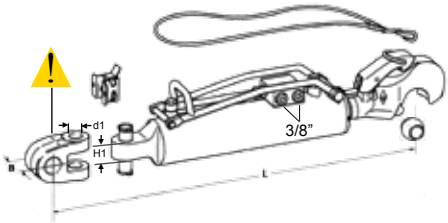

Option 2

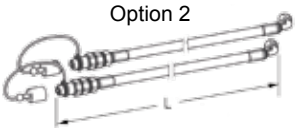

TopLink Includes		
Cat	Description	Part Number
All	Release Cable	**305453**
2	Ball Bush	**099042**
3 / 70	Ball Bush	**099044**
3 / 90	Ball Bush	**099043**
4	Ball Bush	**204783**
4 / 3	Ball Bush	**205125**
2	Support Clip	**308347**
3 / 70	Support Clip	**308347**
3 / 90	Support Clip	**307477**

Tractor Power	Cat / Type	Length	d1	H1	Part Number
100 Hp	**2 / 63**	550 - 730	20.2	27.5	**309534**
		600 - 830	20.2	27.5	**309535**
150 Hp	**3 / 70**	575 - 760	25.2	39.5	**203020**
		612 - 797*	25.2	39.5	**203020**
		600 - 785	25.2	39.5	**309536**
		637 - 822*	25.2	39.5	**309536**
		665 - 915	25.2	39.5	**309537**
		702 - 952*	25.2	39.5	**309537**
>250 Hp	**3 / 90**	590 - 775	25.2	39.5	**203021**
		627 - 812*	25.2	39.5	**203021**
		625 - 810	25.2	39.5	**309538**
		662 - 847*	25.2	39.5	**309538**
		700 - 950	25.2	39.5	**309539**
		737 - 987*	25.2	39.5	**309539**
		771 - 1021	28.2	55.0	**204404**
250< Hp	**4-3 / 120**	704 - 887	32.1	55.5	**205131**
		769 - 1017	32.1	55.5	**205132**
OPTIONAL ACCESSORIES	* Length is determined by using the 100mm Long Fork End				
Option 2	Hydraulic Hose Kit with Quick-Fitting couplings			L = 950	**202527**

HYDRAULIC TOP LINK: FORK END + EYEBALL (Implement Side)

Maximum tensile strength & compressive forces for extreme demands on performance
Versatile use due to interchangeable fork ends
valve block protected by special reinforced clip complete with clip and tractor side retainer.
Extreme high forces can be absorbed dut to implement-side eyebolt.

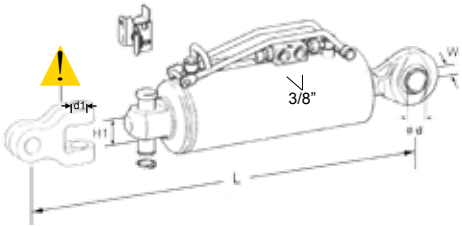

Option 2

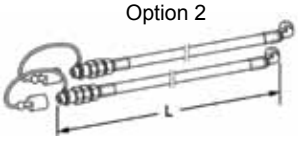

Tractor Power	Cat / Type	Length	Stroke	W	d	d1	H1	Part Number
250< Hp	**4-3 / 120**	669 - 892	223	51	32	32.1	55.5	**205129**
				51	37	32.1	55.5	**205130**
OPTIONAL ACCESSORIES								
Option 2	Hydraulic Hose Kit with Quick-Fitting couplings					L = 950		**202527**

WHEN ORDERING PLEASE NOTE: All Hydraulic Top Links to suit Fork End (Tractor Side) Part Numbers do not include the Fork End. Refer to Fork Section (Page 19) for desired end and order separately.

COMPONENTS: HYDRAULIC TOP LINK: FORK END + HOOK

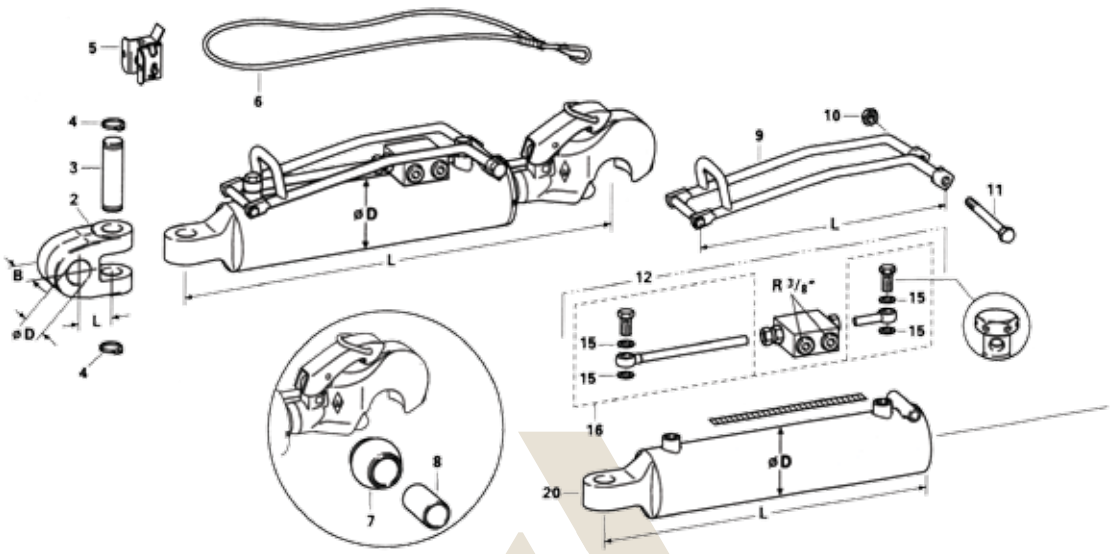

Item	Cat / Type	Ø Dia mm	L mm	Part Number	Technical Data	Description
2	2	19.3	46	306403	B=44	Fork End (as per listed on page 19)
		20.2	46	306400		
		22.2	46	306401		
		25.7	46	306404		
		28.2	46	306405		
	3	25.7	63	306372	B=51	
		25.7	100	309341		
		28.2	63	306406		
		28.2	100	309143		
		32.3	63	306399		
		32.3	100	308016		
		35.2	63	309181		
		35.2	100	309144		
		37.3	63	309125		
		37.3	100	309126		
3	2			306402	Ø 20x70	Pin
	3			308609	Ø 25x101	
4	2			304117	Ø 20x1.75	Circlip
	3			702048	Ø 25x2	
5				308347		Support Clip
6	2/63+3/70			305453	L=1800	Release Cable
	3/90			307612	L=1750	
7	2			099042	Ø 50x Ø 25.7	Ball Bush
	3/2			099044	Ø 60 x Ø 25.7	
	3			099043	Ø 60 x Ø 32.3	
8	1/2			082649	Ø 25 x Ø 19.4	Adapter Bush
	2/3			305278	Ø 32 x Ø 25.7	
9			285	309480		Retainer
			340	309479		
10				020576	M10	Nut
11				304888	M10x75	Bolt
12				202194		Non Return Valve complete with fittings
15				201911		Gasket
16				202195		Hyd Fittings

COMPONENTS: HYDRAULIC TOP LINK: FORK END + HOOK

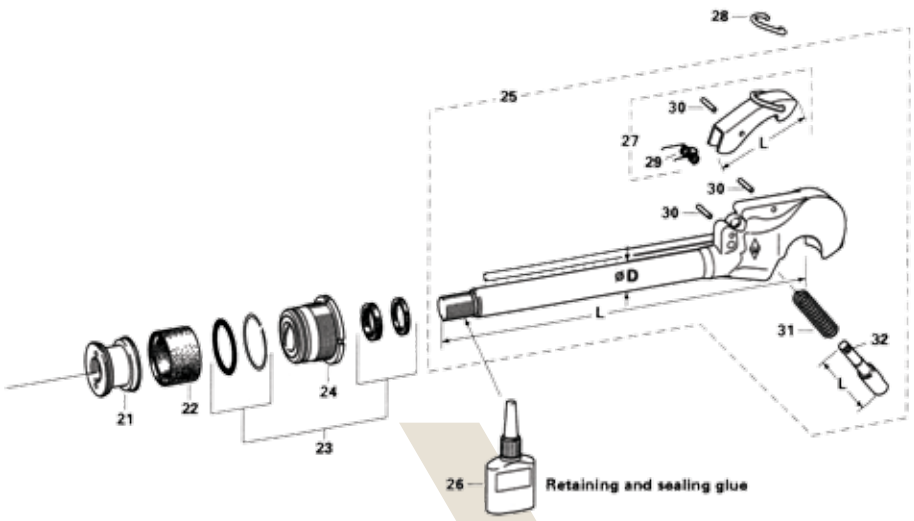

Item	Cat / Type	Ø Dia mm	L mm	Part Number	Technical Data	Description
20	2/63	75	352	309491		Cylinder
	2/63	75	407	309490		
	3/70	85	378	309471		
	3/70	85	443	309470		
	3/90	110	388	309515		
	3/90	110	453	309514		
21				309509	Ø 61.5 x M28 x 1.5	Piston
				309475	Ø 68.5 x M30 x 2	
				309523	Ø 88.5 x M34 x 2	
22				309511	Ø 63	Piston Seal
				309483	Ø 70	
				309525	Ø 90	
23	2/63			309532		Sealing Kit
	3/70			309533		
	3/90			309540		
24	2/63			309508	M68x1.5	Cylinder Cover
	3/70			309474	M74x1.5	
	3/90			309524	M94x2	
25	2/63	36	419	309503	M28x1.5	Piston Rod Complete
	2/63	36	469	309502	M28x1.5	
	3/70	36	437	309473	M30x2	
	3/70	36	502	309472	M30x2	
	3/90	40	462	201223	M34x2	
	3/90	40	537	201224	M34x2	
26				304833	Omnifit 58H	Glue (Take installation instructions into account)
27	2/63+3/90		86	306841		Release Lever Kit
	3/70		94	306842		
28				099015		Clip
29				099049		Spring
30				010486	6x28	Roll Pin
31	2			305198	Ø 19.6 x 95.5	Spring
	3			099050	Ø 19.8 x 84.2	
32	2		109	305031		Locking Pin
	3		119	099113		

COMPONENTS: HYDRAULIC TOP LINK: INTEGRAL EYEBALL & HOOK

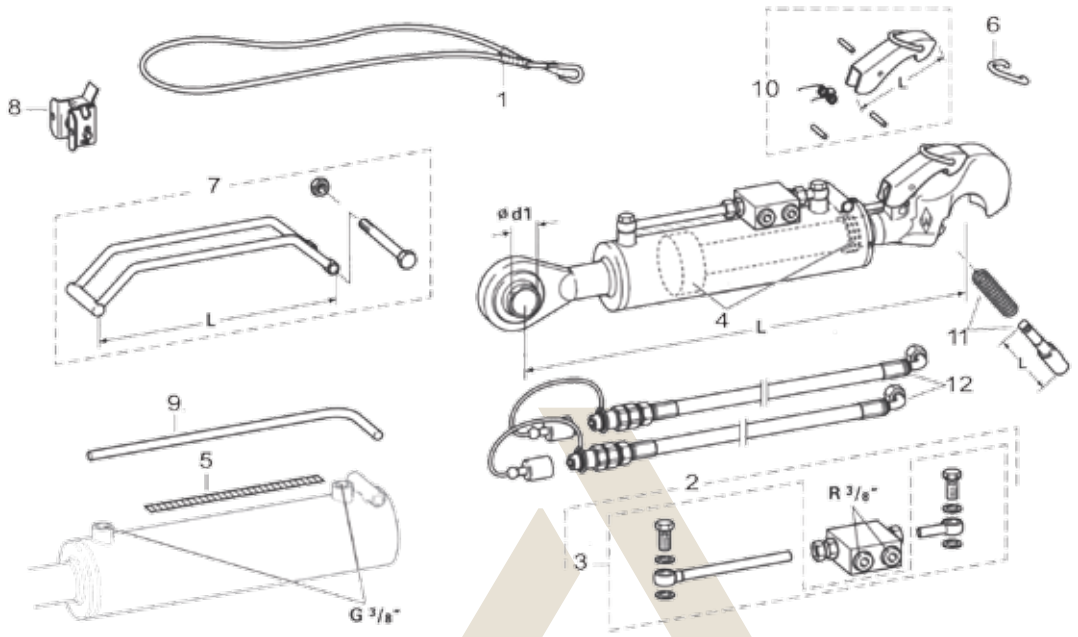

Item	Cat / Type	L mm	Part Number	Technical Data	Description
1	2/3		**305453**	L= 1800 mm	Release cable
2	2/3		**202958**		Non-return valve
3	2/3		**202959**		Fitings
4	2		**202956**		Sealing Kit
	3		**202957**		
5		181	**309530**		Marking label
		241	**305934**		
6	2/3		**99015**		Clip
7	2/3	325	**202526**		Retainer
		365	**202525**		
8	2/3		**308347**		Support clip
9		391	**309520**		Marking rod
10	2 / 63	86	**306841**	Agraset 312	Release Lever kit
	3 / 70	94	**306842**	Agraset 313	
11	2	109	**305767**	Agraset 314	Locking pin
	3	119	**305765**	Agraset 315	
12		870	**202527**		Tube kit

COMPONENTS: HYDRAULIC TOP LINK: FORKEND & EYEBALL

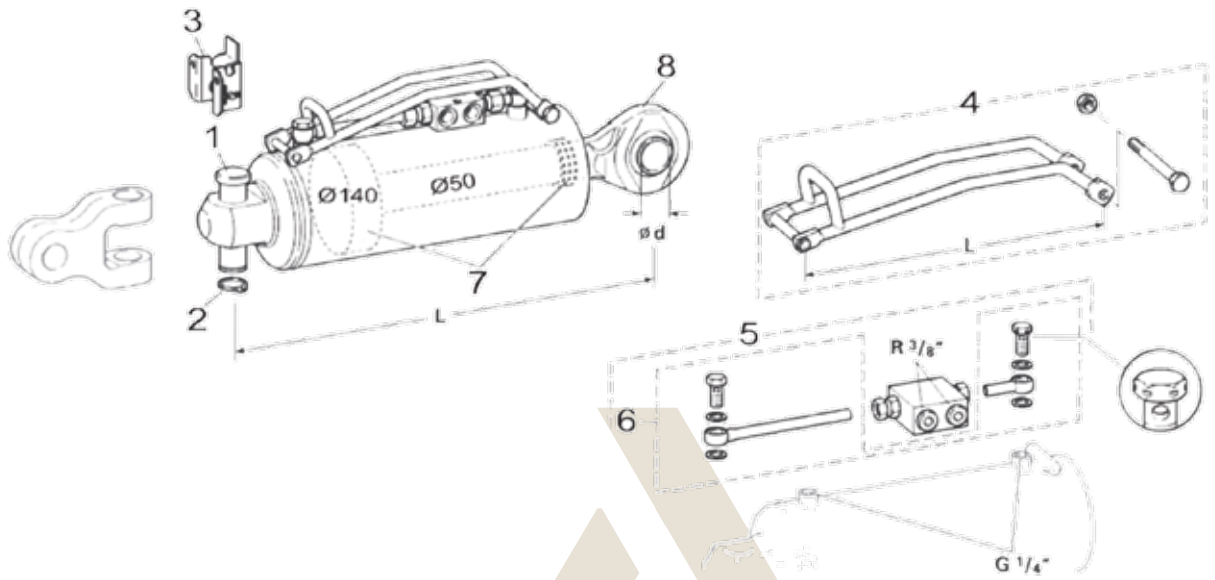

Item	Cat / Type	Ø Dia mm	L mm	Part Number	Technical Data	Description
1				**201577**	Ø 32 x 112	Bolt
2				**201692**	1.25” x 0.093”	Retaining ring
3				**308347**		Support clip
4			340	**203617**		Retainer
5				**202194**		Non-return valve
6				**202195**		Fittings
7				**203620**		Sealing kit
8	3 / 120	32.2		**204296**		Piston rod, inc Seals and cover
		37.2		**204295**		

Everything for Tractor Attachments

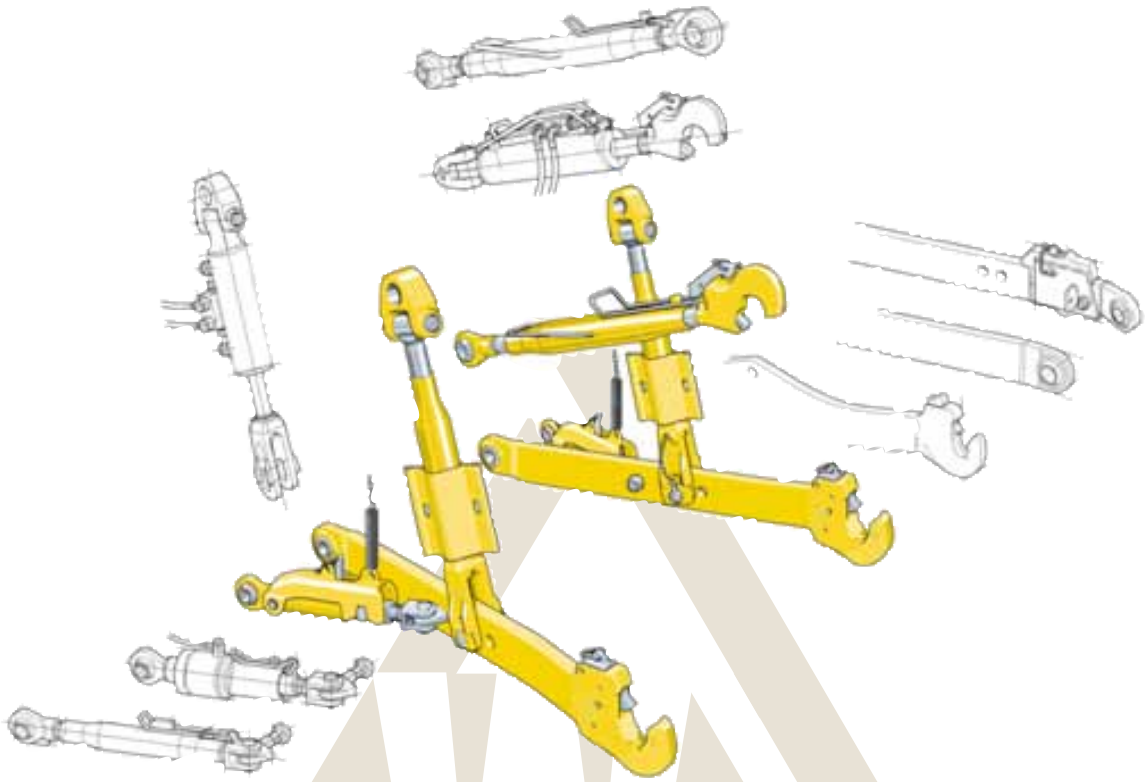

Look for the Diamond Mark for Peace of Mind

MANUAL TOP LINK

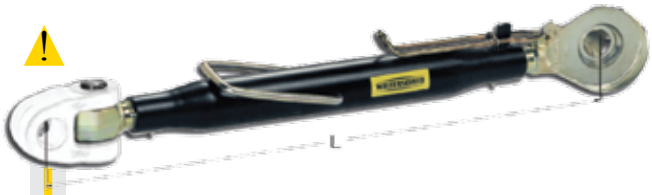

IMPLEMENT SIDE EYEBALL	Cat	Length	Part Number
	TRACTOR-SIDE FORK		
	2	492 - 712	**695F / 770**
	2	532 - 762	**696F / 770**
	2	592 - 912	**697F / 920**
	3	545 - 775	**690F / 795**
	3	582 - 812*	**690F / 795**
	* Length is determined by using the 100mm Long Fork End		

	TRACTOR-SIDE EYEBALL		
	2	480 - 700	**695 / 770**
	2	520 - 750	**696 / 770**
	2	580 - 900	**697 / 920**
	3	525 - 755	**690 / 795**
	3	685 - 980	**694 / 795**
	3s	605 - 815	**308659***
	*Includes Tractor Side Eyeball End		

IMPLEMENT SIDE HOOK	Cat	Length	Part Number
	TRACTOR-SIDE FORK		
	2	522 - 737	**200187**
	2	557 - 787	**200188**
	2	622 - 937	**200189**
	3	585 - 815	**200190**
	3	622 - 852*	**200190**
	3	625 - 855	**200191**
	3	662 - 892*	**200191**
	3	665 - 975	**200192**
	3	702 - 1012*	**200192**
	3	705 - 1015	**200193**
	3	742 - 1052*	**200193**
	3	745 - 1055	**200194**
	3	782 - 1092*	**200194**
	* Length is determined by using the 100mm Long Fork End		

	TRACTOR-SIDE EYEBALL		
	2	510 - 725	**309955**
	2	545 - 775	**309956**
	2	610 - 925	**309957**
	3	565 - 795	**309950**
	3	645 - 955	**309952**
	3	725 - 1035	**309954**
	3s	640 - 850	**308658***
	*Includes Tractor Side Eyeball End		
	IMPLEMENT HOOK Include		
	Cat	Description	Part Number
	2	Release Cable	**305392**
	3	Release Cable	**305453**
	2	Ball Bush	**099042**
	3	Ball Bush	**099043**

Manual Top Link part numbers do not include the Tractor Side Ends. Refer to Eyeball & Fork Section for desired Tractor Side End (Page 16-19).

COMPONENTS: MANUAL TOP LINK

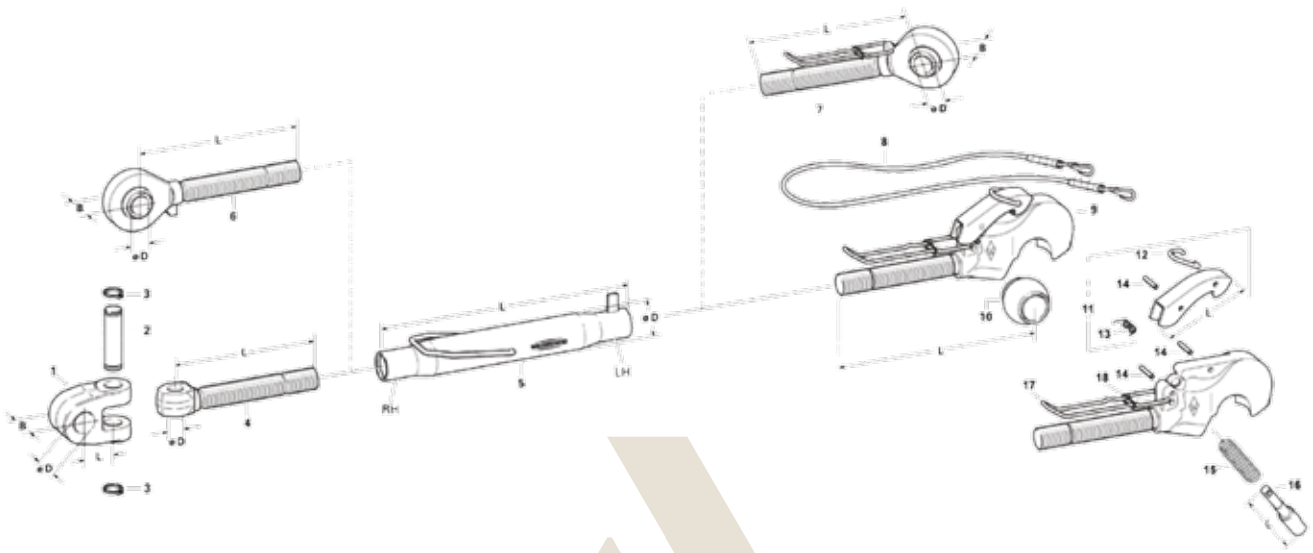

Ref	CAT	Ø D	L	Part Number	Dimension	Description
1	-	-	-	REFER FORK END SECTION PAGE 19		
2	**2**	-	-	**306402**	0/ 20x70	Pin
	3	-	-	**308609**	0/ 25x101	Pin
3	**2**	-	-	**304117**	DIN 471 - 20x1.75	Retaining Ring
	3	-	-	**702048**	DiN 471 - 25x2	Retaining Ring
4	**2**	20.1	185	**200057**	M30	Rod Head
	2	20.1	235	**200058**	M30	Rod Head
	3	25.1	197	**309680**	M36x3	Rod Head
	3	25.1	247	**309739**	M36x3	Rod Head
5	**2**	50	320	**309695**	-	Centre Tube
	2	50	370	**309696**	-	Centre Tube
	2	50	420	**309697**	-	Centre Tube
	3	60	360	**309690**	-	Centre Tube
	3	60	400	**309691**	-	Centre Tube
	3	60	440	**309692**	-	Centre Tube
	3	60	480	**309693**	-	Centre Tube
	3	60	520	**309694**	-	Centre Tube
	3S	70	410	**308654**	-	Centre Tube (inc Locking Lever)
6	**2 - 1**	19.2	150	**082828**	B = 44 M30	Eye Ball
	2	19.2	220	**309681**	B = 44 M30	Eye Ball
	2	22.2	220	**309683**	B = 44 M30	Eye Ball
	2	25.7	220	**309685**	B = 51 M30	Eye Ball
	2	19.2	270	**309682**	B = 44 M30	Eye Ball
	2	22.2	270	**309684**	B = 44 M30	Eye Ball
	2	25.7	270	**309686**	B = 51 M30	Eye Ball
	3	25.7	240	**309679**	B = 51 M36x3	Eye Ball
	3	28.2	240	**309677**	B = 51 M36x3	Eye Ball
	3	32.3	240	**309675**	B = 51 M36x3	Eye Ball
	3	25.7	280	**309678**	B = 51 M36x3	Eye Ball
	3	28.2	280	**309676**	B = 51 M36x3	Eye Ball
	3	32.3	280	**309659**	B = 51 M36x3	Eye Ball
	3	37.3	300	**200263**	B = 51 M42x3	Eye Ball
	3S	32.3	280	**201540**	B = 51 1 3/4x5 UNC	Eye Ball
	3S	37.5	300	**200263**	B = 51 M42x3	Eye Ball
	4	45.2	280	**204202**	B = 64.4 1 3/4x5 UNC	Eye Ball

COMPONENTS: MANUAL TOP LINK

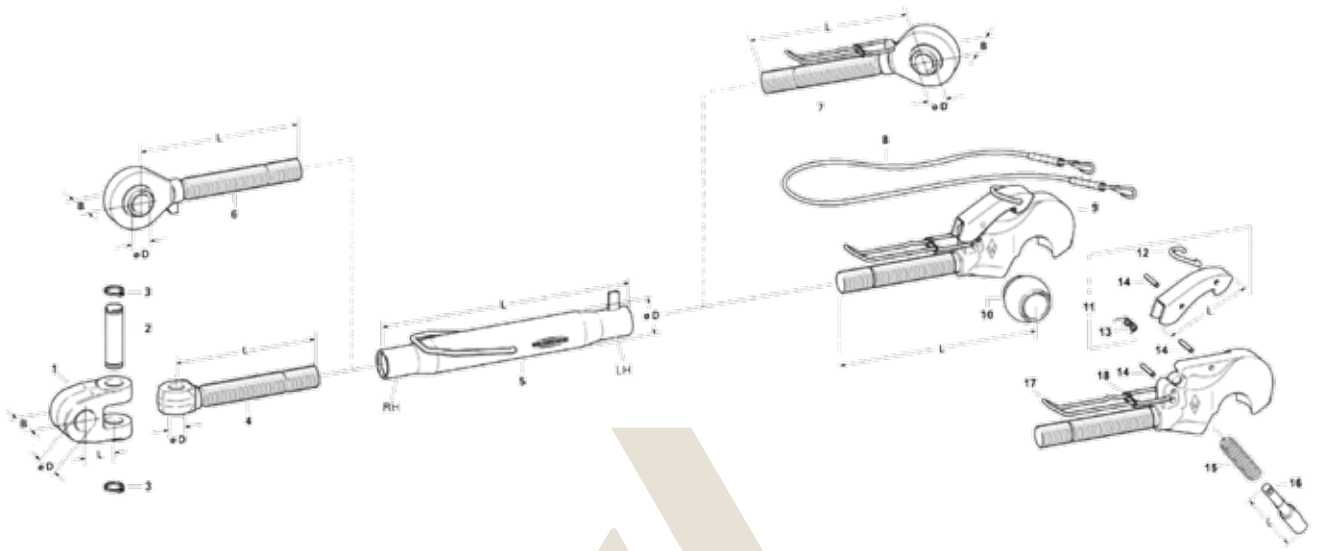

Ref	CAT	Ø D	L	Part Number	Dimension	Description
7	**2**	25.7	270	**307770**	B = 51 M30 LH	Eye Ball (inc Retainer Spring)
	2	25.7	255	**201920**	B = 51 M30 LH	Eye Ball (inc Retainer Spring)
	3	25.7	280	**309795**	B = 51 M36x3 LH	Eye Ball (inc Retainer Spring)
	3	32.3	280	**309796**	B = 51 M36x3 LH	Eye Ball (inc Retainer Spring)
	3S	32.3	280	**201539**	B = 51 1 3/4x5 UNC LH	Eye Ball (inc Retainer Spring)
	3S	32.3	280	**200455**	B = 51 M42x3 LH	Eye Ball (inc Retainer Spring)
8	-	-	-	**305392**	L = 1500	Release Cable
	-	-	-	**305453**	L = 1800	Release Cable
9	-	-	-	REFER TOP LINK HOOK SECTION PAGE 18-19 (TYPE A)		
10	**2**	-	-	**099042**	D/ 50x d/25.7	Ball Bush
	3 / 2	-	-	**099044**	D/ 60x d/25.7	Ball Bush
	3	-	-	**099043**	D/ 60x d/32.3	Ball Bush
11	**2**	-	86	**306841**	-	Release Lever Kit
	3	-	94	**306842**	-	Release Lever Kit
12	-	-	-	**099015**	-	Clip
13	-	-	-	**099049**	-	Spring
14	-	-	-	**010486**	DIN 1481 - 6x28	Roll Pin
15	**2**	-	-	**305198**	D/ 19.6x95.5	Compression Spring
	3	-	-	**099050**	D/ 19.8x84.2	Compression Spring
16	**2**	-	108	**305031**	-	Locking Pin
	3	-	118	**099113**	-	Locking Pin
17	-	-	-	**307440**	-	Retainer Spring
18	-	-	-	**307632**	-	Link Clip

MANUAL TOP LINK THREADED HOOKS

TYPE	CAT	THREAD		Dimension				Part Number
		RH	LH	L	L1	L2	D	
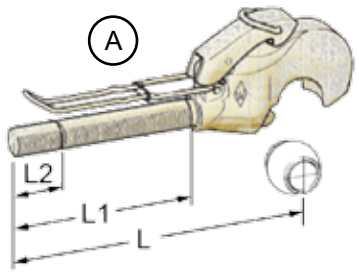	2	-	M30x3.5	270	165	45	-	**307441**
	2	-	M30x3.5	320	210	45	-	**309673**
	2	M30x3	-	259	149	-	-	**307116**
	3	-	M36x4	330	210	55	-	**308343**
	3	-	M36x3	280	160	45	-	**309918**
	3	-	M36x3	305	185	-	-	**307443**
	3	-	M36x3	330	210	55	-	**309671**
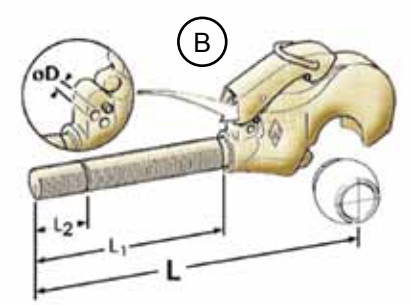	1	-	M24x3	254	158	36	-	**202076**
	2	M27x3	-	275	165	45	7.5	**306232**
	2	M27x3	-	305	195	-	7.5	**305008**
	2	M30x3.5	-	320	210	-	7.5	**306229**
	2	-	M36x4	280	170	62	6.5	**306297**
	2	-	M27x3	275	165	45	-	**305249**
	2	-	M30	270	160	-	-	**305252**
	2	M30x3	-	320	210	-	-	**305626**
	2	-	M36x4	405	295	-	-	**306278**
	3	-	M36x4	300	180	55	6.5	**306299**
	3	M36x3	-	330	210	-	7.5	**305009**
	3	M36x4	-	330	260	-	-	**305540**
	3	-	1 1/4x7UNC	253	133	-	-	**307607**
	3	-	1 1/4x7UNC	297	177	-	-	**305365**
	3S	-	1 5/8x8 UN	313	133	-	-	**309268**
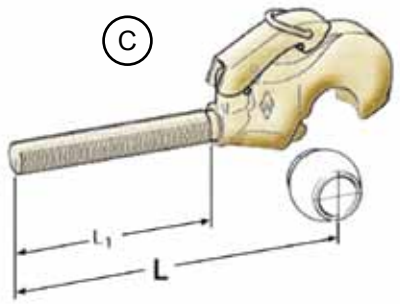	2	M24x3	-	320	210	-	-	**305612**
	2	M27x2	-	385	275	-	-	**309030**
	2	M30x3	-	275	165	-	-	**309029**
	2	M30x3	-	400	290	-	-	**309797**
	2	-	M30x3	320	210	-	-	**305525**
	2	M30x3.5	-	320	210	-	-	**306604**
	2	M33x3.5	-	320	210	-	-	**305640**
	2	-	1 1/16x12UN	250	140	-	-	**305824**
	2	1 1/8x7 UNC	-	320	210	-	-	**305812**
	2	-	1 1/8x7UNC	320	210	-	-	**305818**
	2	-	1 1/4x7UNC	320	210	-	-	**305537**
	2	1 1/4x7UNC	-	320	210	-	-	**305813**
	3	-	M30x3	330	210	-	-	**305823**
	3	-	M30x3.5	330	210	-	-	**305836**
	3	M30x3.5	-	330	210	-	-	**305286**
	3	M36x3	-	382	157	-	-	**307005**
	3	M39x3	-	310	190	-	-	**306017**
	3	1 3/8x6UNC	-	260	140	-	-	**305826**
	3	1 3/8x8UN	-	286	118	-	-	**306375**
	3	1 3/8x8UN	-	340	145	-	-	**306277**
	3S	-	1 5/8x8UNC	382	202	55	-	**309067**

MANUAL TOP LINK THREADED HOOKS

TYPE	CAT	THREAD		Dimension				Part Number
		RH	LH	L	L1	L2	D	
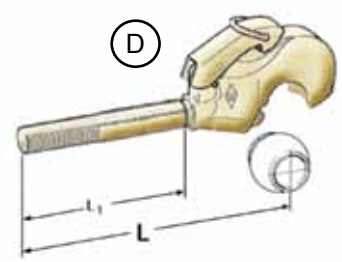	2	M32x3	-	340	205	-	-	**306993**
	2	1 1/4x7UNC	-	310	205	-	-	**309396**
	2	1 1/4x7UNC	-	335	147	-	-	**306426**
	2	-	1 1/4x7UNC	335	134	-	-	**305391**
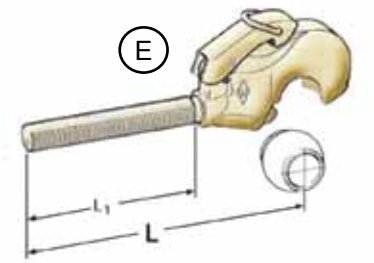	2	M36x3	-	320	210	-	-	**307217**
	3	M36x3	-	330	210	-	-	**308276**
	3	-	1 3/8x6UNC	360	240	-	-	**306370**
	3	-	1 1/2x6UNC	420	210	-	-	**307258**
	3S	1 3/4x5UNC	-	320	190	-	-	**308701**
	3S	-	1 3/4x5UNC	416	228	-	-	**308670**
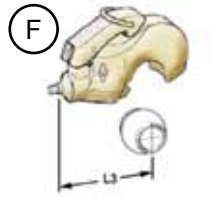	2	⚠ Installing Weld on Hook Stick Weld (using Walterscheid Electrodes Part. 094008) or gas shielded arc welding only. An anhydrogenous high-strength, deep penetration weld is required.				L3 =118		**305605**
	3					L3 =128		**308202**

FORK END - HYDRAULIC / MANUAL

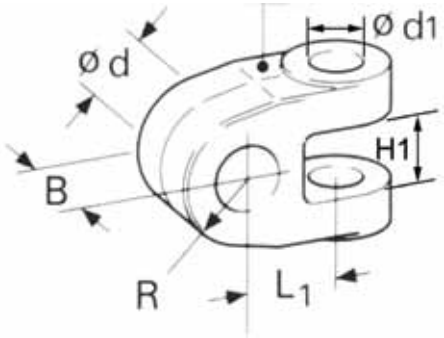

CAT	B	Ø d	Ø d1	L1	H1	R	PART NUMBER
2	41	19.3	20.2	46.5	28.1	26	**306403**
2	44	20.2	20.2	46.5	28.1	26	**306400**
2	44	22.2	20.2	46.5	28.1	26	**306401**
2	44	25.7	20.2	46.5	28.1	26	**306404**
2	44	28.2	20.2	46.5	28.1	26	**306405**
3	45 / 50	25.7	25.2	68	40.1	35	**200043**
3	50	25.7	25.2	63	40.1	35	**306372**
3	50	28.2	25.2	63	40.1	35	**306406**
3	50	32.3	25.2	63	40.1	35	**306399**
3	50	35.2	25.2	63	40.1	35	**309181**
3	50	37.3	25.2	63	40.1	35	**309125**
3	50	32.3	28.2	67	55.6	35	**309881**
3	50	35.2	28.2	67	55.6	35	**204402**
3	50	37.3	28.2	67	55.6	35	**204403**
3	50	25.7	25.2	100	40.1	35	**309341**
3	50	28.2	25.2	100	40.1	35	**309143**
3	50	32.3	25.2	100	40.1	35	**308016**
3	50	35.2	25.2	100	40.1	35	**309144**
3	50	37.3	25.2	100	40.1	35	**309126**
4-3	50	32.3	32.2	110	56.1	35	**202031**
4-3	50	37.3	32.2	110	56.1	35	**202023**
3	66	28.2	28.2	57	40.1	35	**201588**
4-3	51	32.3	32.2	110	50.1	35	**201574**
4-3	51	35	32.2	110	50.1	35	**203641**
4-3	51	37.3	32.2	110	50.1	35	**201575**
4-3	51	45	32.2	110	50.1	35	**4/120-45**
4	50	45.2	32.2	110	56.1	41	**204337**

TOP LINK ACCESSORIES

	Description	Cat	Technical Data			Part Number
	Support Clips	2-3	for Old Hyd Top Link			**305994**
		2-3	for New Hyd Top Link			**308347**
		3/90	for New Hyd Top Link			**307477**
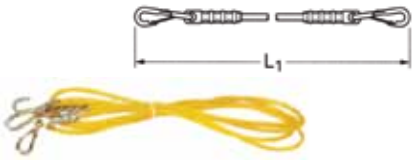	Release Cables	2	L=1500			**305392**
		2	2 x L=1500			**305427**
		3/70	L=1800			**305453**
		3/90	L=1750			**307612**
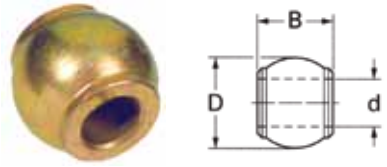	Upper Ball Bushes		D	d	L	
		1	38	19	44	**305277**
		2	50	25.4	44	**306674**
		2	50	25.4	51	**099042**
		3-2	60	25.4	51	**099044**
		3	60	32	51	**099043**
		3	60	32	51	**202484** hardened & tempered
		4-3	78	32.3	64	205125
		4HD	78	45.2	64	204783 hardened & tempered
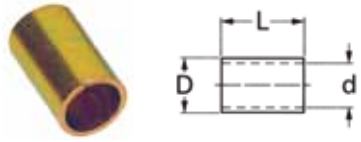	Adapter Bushes	2-1	25	19.4	44	**082649**
		3-2	32	25.7	51	**305278**
		3-2	Clinch on			**083269**
		4-3	37	32	51	**8401580**
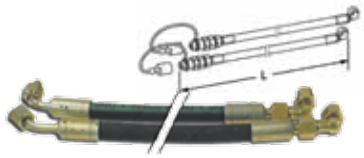	Hydraulic Hose Kit with QR Couplings	2 & 3	L=950			**202527**

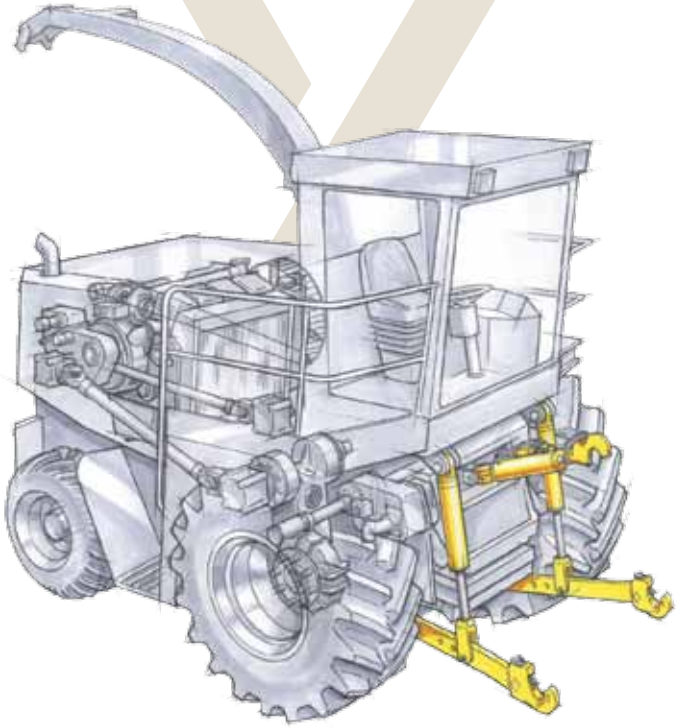

IMPORTANT CHARACTERISTICS for 3 POINT IMPLEMENT ATTACHMENT

Implement connection for Tractors without 3Pt Quick Coupler

Implement connection for Tractors with 3Pt Quick Coupler (Hook Type)

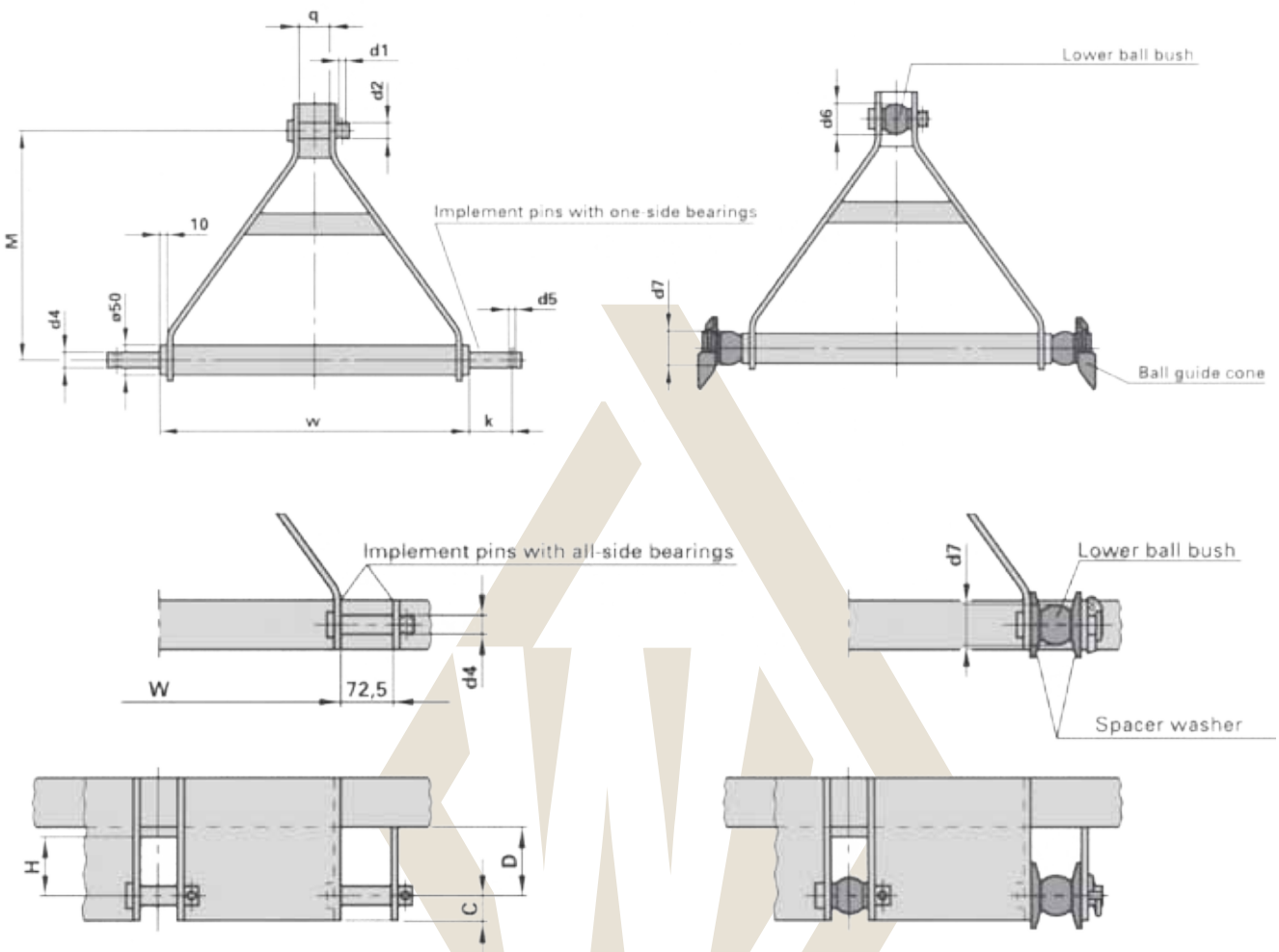

Cat	Tractor Power	d1	d2	d4	d6	d7	k	d5	q	M	w	C	D	H
1	...50 Hp	12	19	22	38	44	39	12	44.5	460	683	35	95	80
2	...100 Hp	12	25.4	28	50	56	49	12	52	610	825	35	95	80
3	...225 Hp	12	31.7	36.6	60	64	52	17	52	685	965	40	105	90
4	...475 Hp	17.5	45	50.8	78	85	68	17.5	65	685	1166.5	50	140	120

WALTERSCHEID

VIC NSW TAS

WALTERSCHEID - VIC
AUSTRALIA
ABN 52 099 707 856

17-31 Discovery Road, Dandenong South
Victoria 3175
PO BOX 4262, Dandenong South, Vic. 3164

PHONE	**03 9580 7300**
FAX	03 9580 0379
MOBILE	0419 319 885

QLD

WALTERSCHEID - QLD
AUSTRALIA
ABN 52 099 707 856

12A Pradella Street, Darra
Queensland 4076

PHONE	**07 3117 2850**
FAX	07 3117 2851
MOBILE	0438 118 577

EMAIL walterscheid@walterscheid.com.au
WEB www.walterscheid.com.au

SA WA NT

JAYBEN AUSTRALIA
PTY LTD
ABN 69 050 241 033

11 Frederick Road, Royal Park
PO BOX 2020 Port Adelaide
South Australia 5015

PHONE	**08 8341 1377**
FAX	08 8341 1677
MOBILE	0429 699 593
EMAIL	jayben@jayben.com.au
WEB	www.jayben.com.au

New Zealand

WALTERSCHEID
(NZ) LTD

63 Colombo Street, Hamilton
PO BOX 5477
New Zealand

PHONE	**07 846 7040**
FAX	07 846 7041
MOBILE	
EMAIL	walterscheid@xtra.co.nz
WEB	

This catalogue is the copyright of Walterscheid Australia.